RR18

TSO'd REGULATED DC TO DC POWER CONVERTER

10-24Vdc to 24Vdc Regulated DC Power Converter

External Wiring

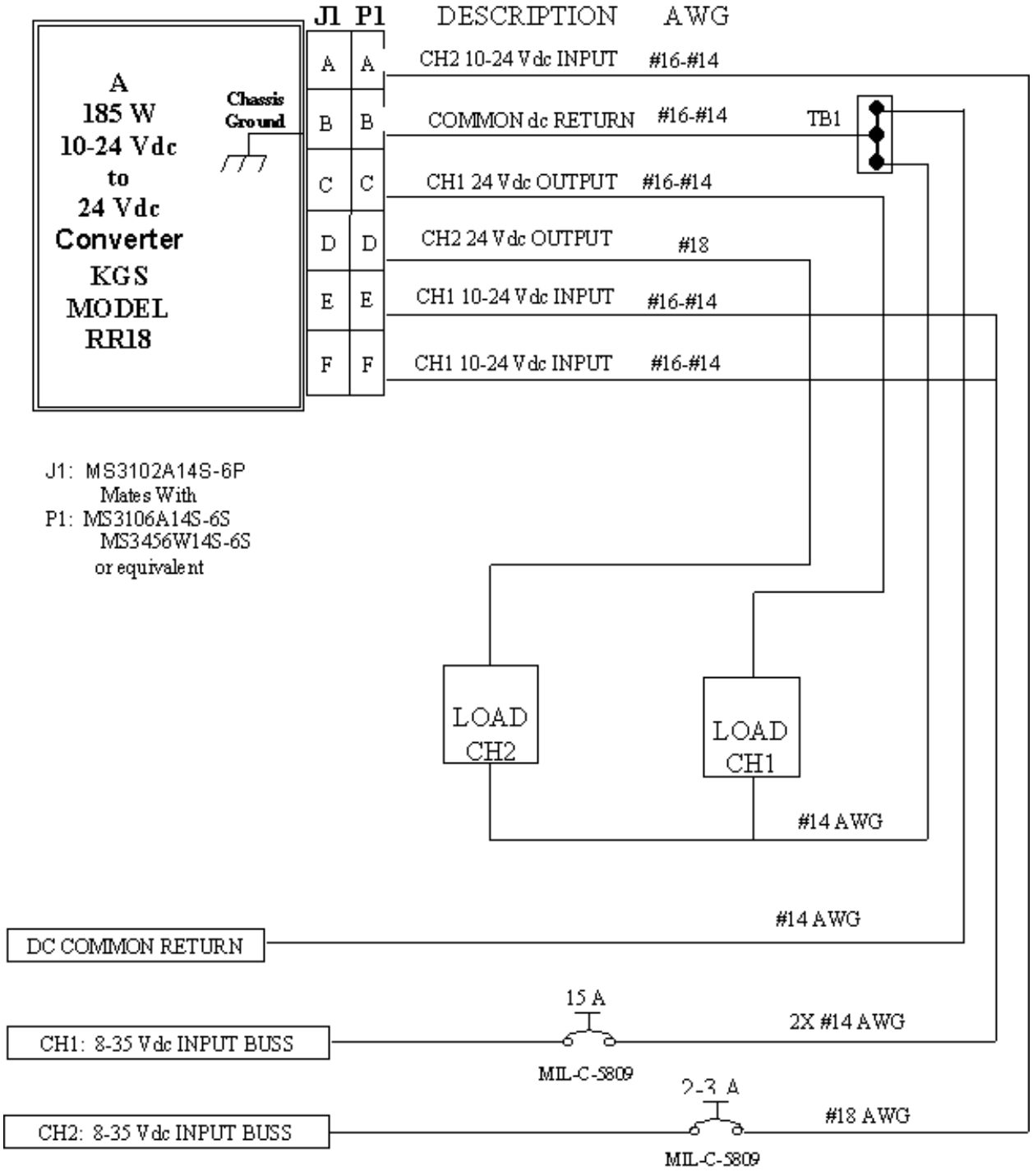

kgs electronics 418 East Live Oak Avenue, Arcadia CA 91006-5619 USA ▪ Phone: 626-574-1175 ▪ Fax: 626-574-0553 ▪ info@kgselectronics.com